Modeling the Heat Flow Anomaly on the San Andreas Fault

Kang Wang Lauren DiPerna

October 28, 2011

About SAF

- Boundary of North America Plate and Pacific Plate
- Right lateral Transform Fault
- About 800 miles long
- About 28 Million years

Model of fault behavior

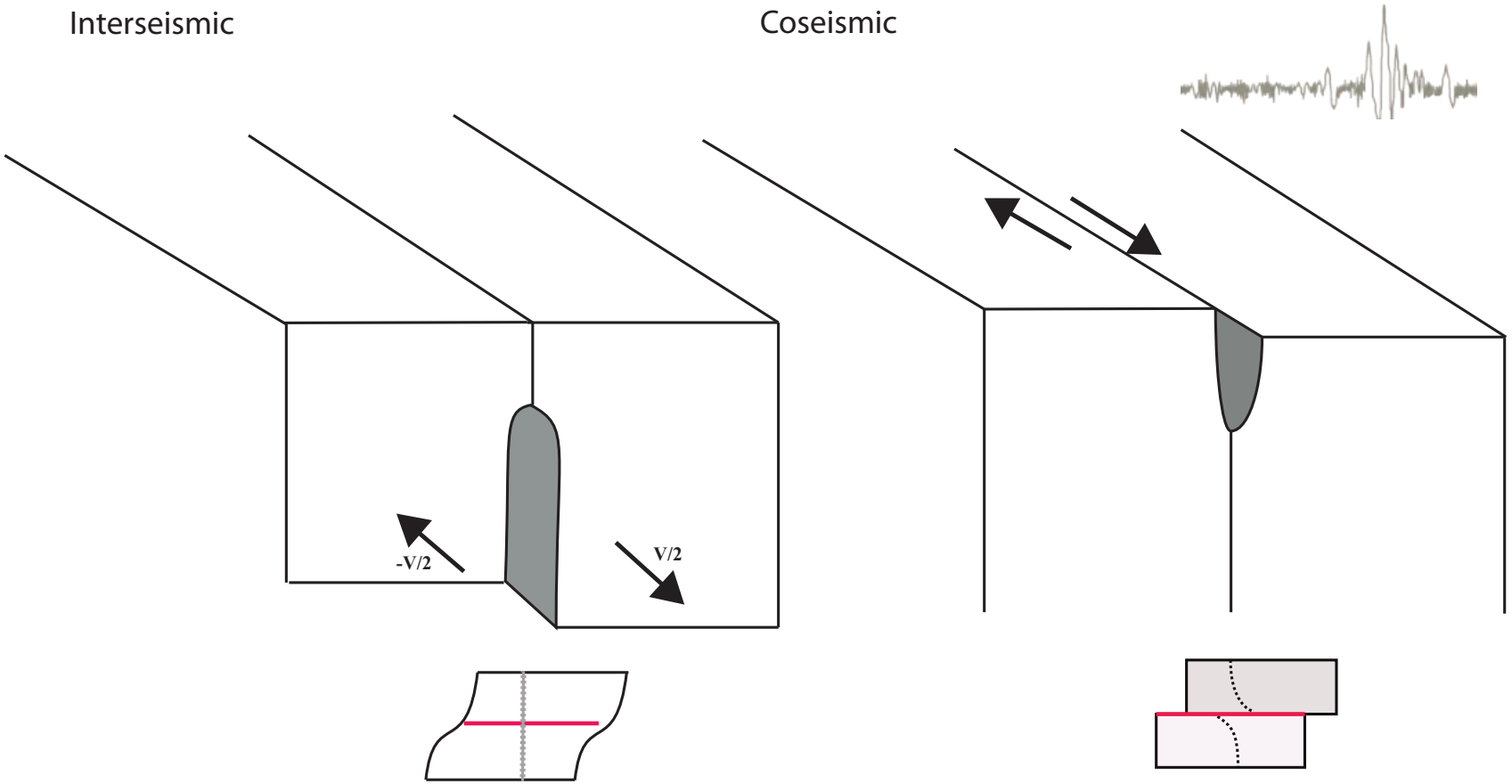

What we expect to find

- We measure temperature because it gives us information about faulting mechanism
- We believe that earthquakes generate heat through friction
- Therefore we should see heat at faults that exceed the Earth's ambient surface flow

Line sources

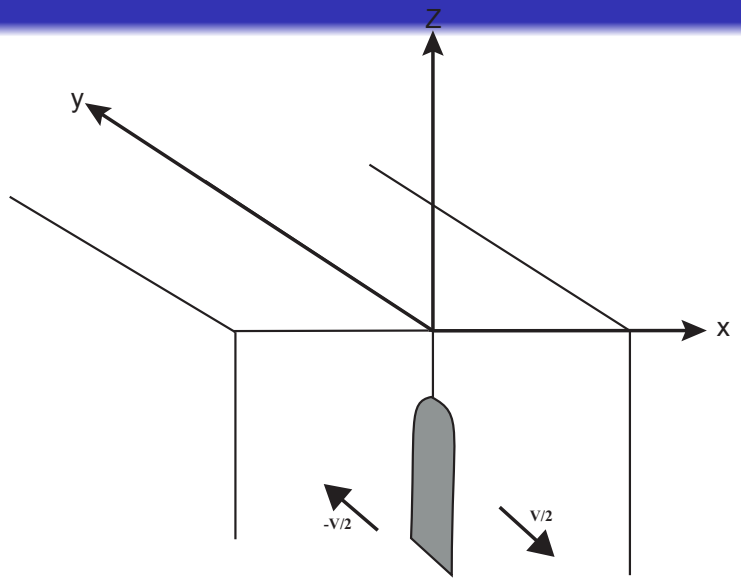

Assuming that the length of fault is infinity, and that there is no heat conduction along the strike direction. Then the 3-D problem reduces to a 2-D one

$$k\left(\frac{\partial^2 T}{\partial x^2} + \frac{\partial^2 T}{\partial y^2}\right) + s(x,z) = 0 \quad (z < 0)$$

$$T(x,0) = 0$$

$$\lim_{|x|\to\infty} T(x,z) = 0$$

$$\lim_{|z|\to\infty} T(x,z) = 0$$

Using Green's function to find the solution for any arbitrary source

Arbitrary source

$$\begin{cases} k\nabla^2 T = -s(M) \\ T|_{\partial V} = \phi(M) \end{cases}$$

Point source

$$\begin{cases} k\nabla^2 G = -\delta(M_0) \\ G|_{\partial V} = 0 \end{cases}$$

$$T(M) = -\int\int_{\partial V} \phi(M_0)\frac{\partial G}{\partial n} dS + \int\int\int_V G \quad s(M_0) dM$$

For the problem here, $T|_{\partial V} = 0$. Also, we have found the Green's function of heat flow at the surface,

$$G_q(x) = -\frac{1}{\pi}\frac{a}{x^2 + a^2}$$

the heat production (*source term*) for a fault with shear stress $\tau(z)$ and relative slip velocity V

$$q_s(z) = \tau(z)V$$

Thus, the surface heat flow generated by a fault extending from d to D is

$$q(x) = -\frac{V}{\pi}\int_d^D \frac{z\tau(z)}{x^2 + z^2} dz$$

Shear stress on the fault

- Assuming that the shear stress of the fault follows Byerlee's law,

$$\tau(z) = \mu(\rho_c - \rho_w)gz$$

and that water percolates to 12 km (depth of seimsmogenic zone), then we can estimate the average shear on the fault

$$\bar{\tau} = \frac{1}{D}\int_0^D \mu(\rho_c - \rho_w)gzdz = \frac{1}{2}\mu(\rho_c - \rho_w)gD \approx 56MPa$$

with coefficient of friction $\mu = 0.6$

- The observed stress drop during an earthquake ranges from 0.1 to 10 MPa with a typical value of 5 MPa, which is about 10 times smaller than the average stress from Byerlee's law.

Heat flow base on Byerlee's law

$$q(x) = -\frac{V}{\pi}\int_d^D \frac{z\tau(z)}{x^2+z^2}dz$$

Assuming that the hydrothermal circulation removes the heat generation from surface to some depth d, then the surface heat flow generated by the fault slip is

$$\begin{aligned} q(x) &= -\frac{\mu(\rho_c-\rho_w)gV}{\pi}\int_d^D \frac{z^2}{x^2+z^2}dz \\ &= -\frac{\mu(r_c-r_w)gV}{\pi}[(D-d)+(x\arctan\frac{d}{x}-x\arctan\frac{D}{x})] \end{aligned}$$

Model predications

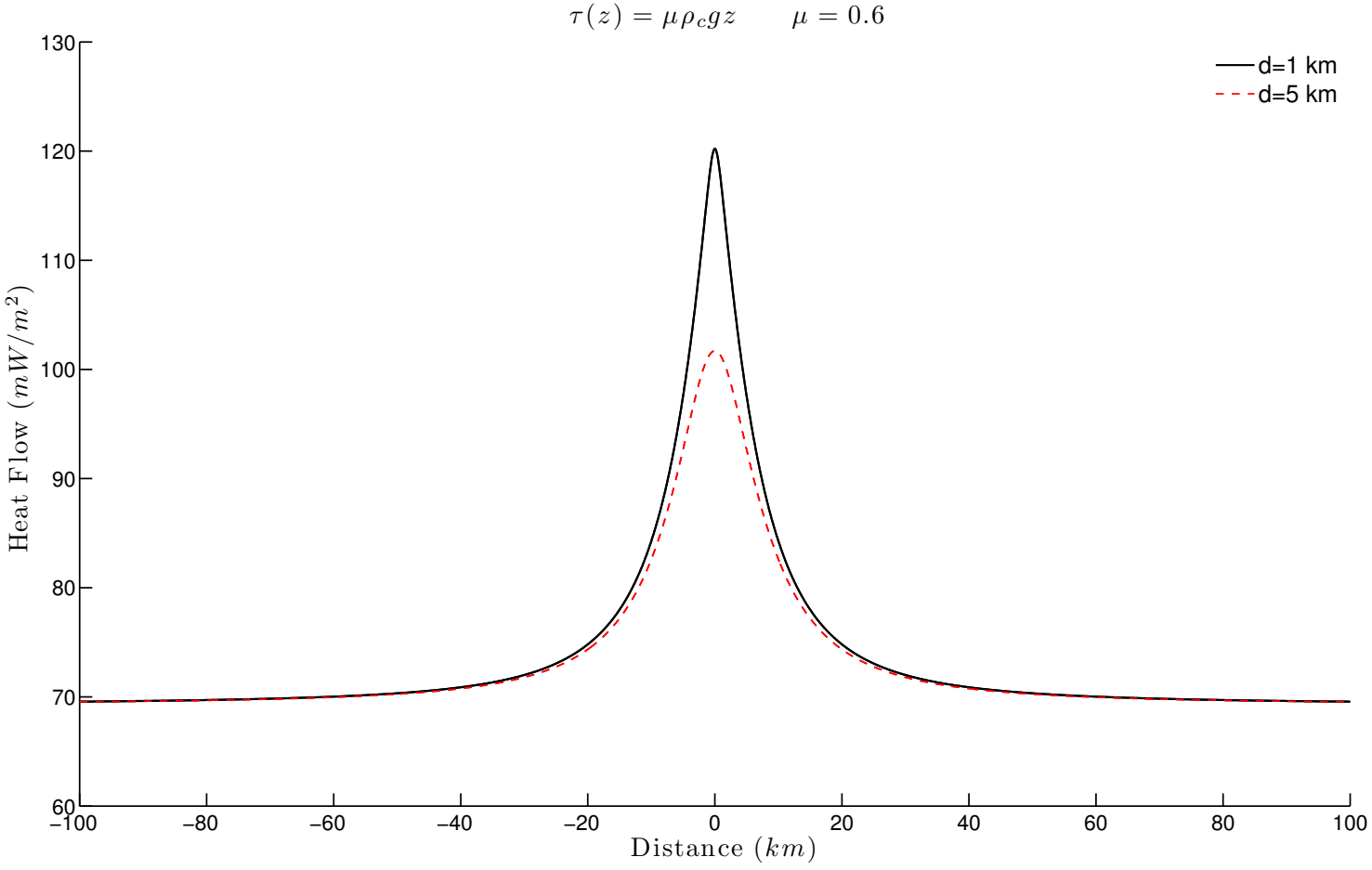

Model predications(cont.)

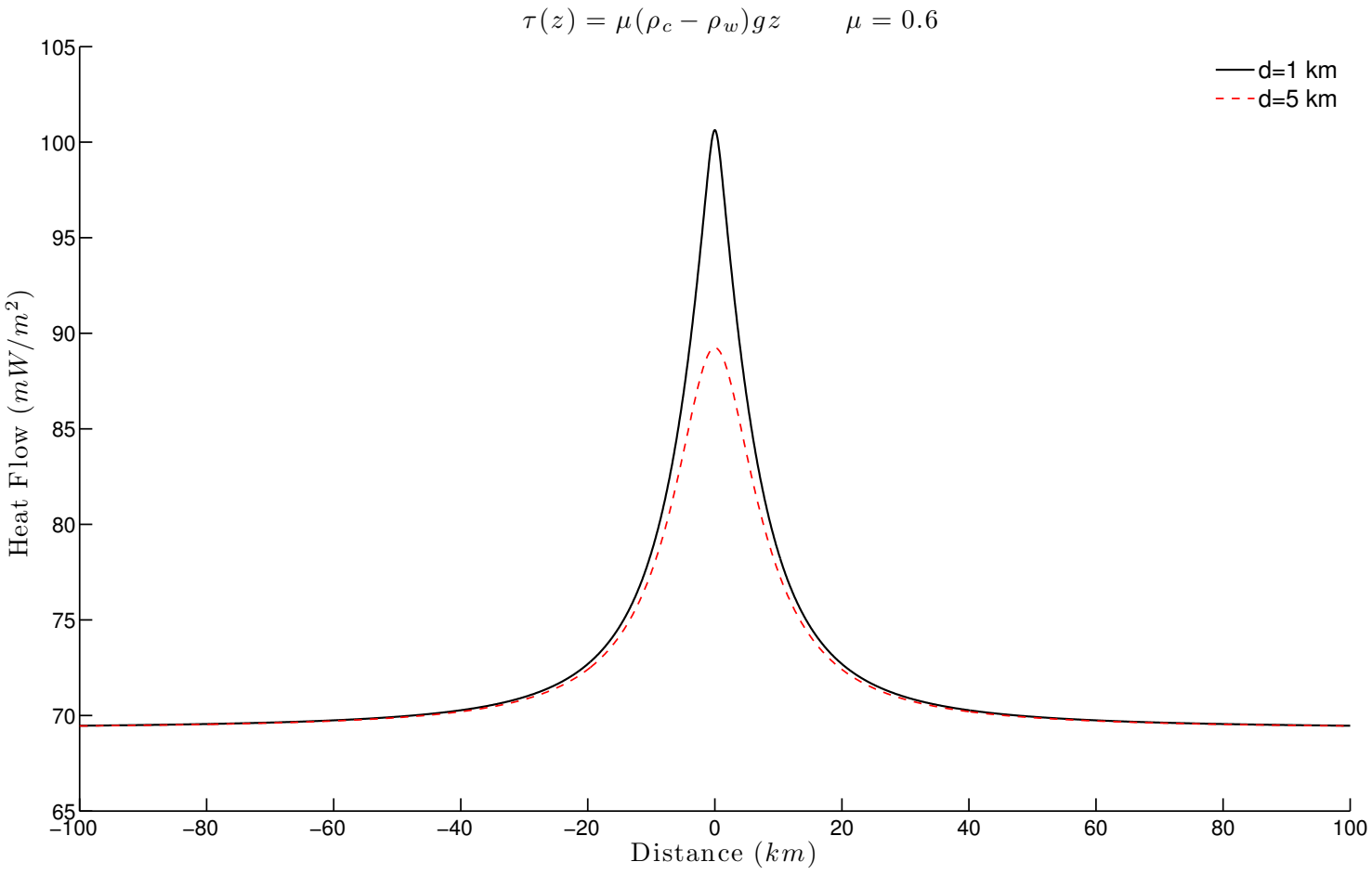

Measurements

- Data is from *Lachenbruch et al, 1980*

Comparison of model and measurements

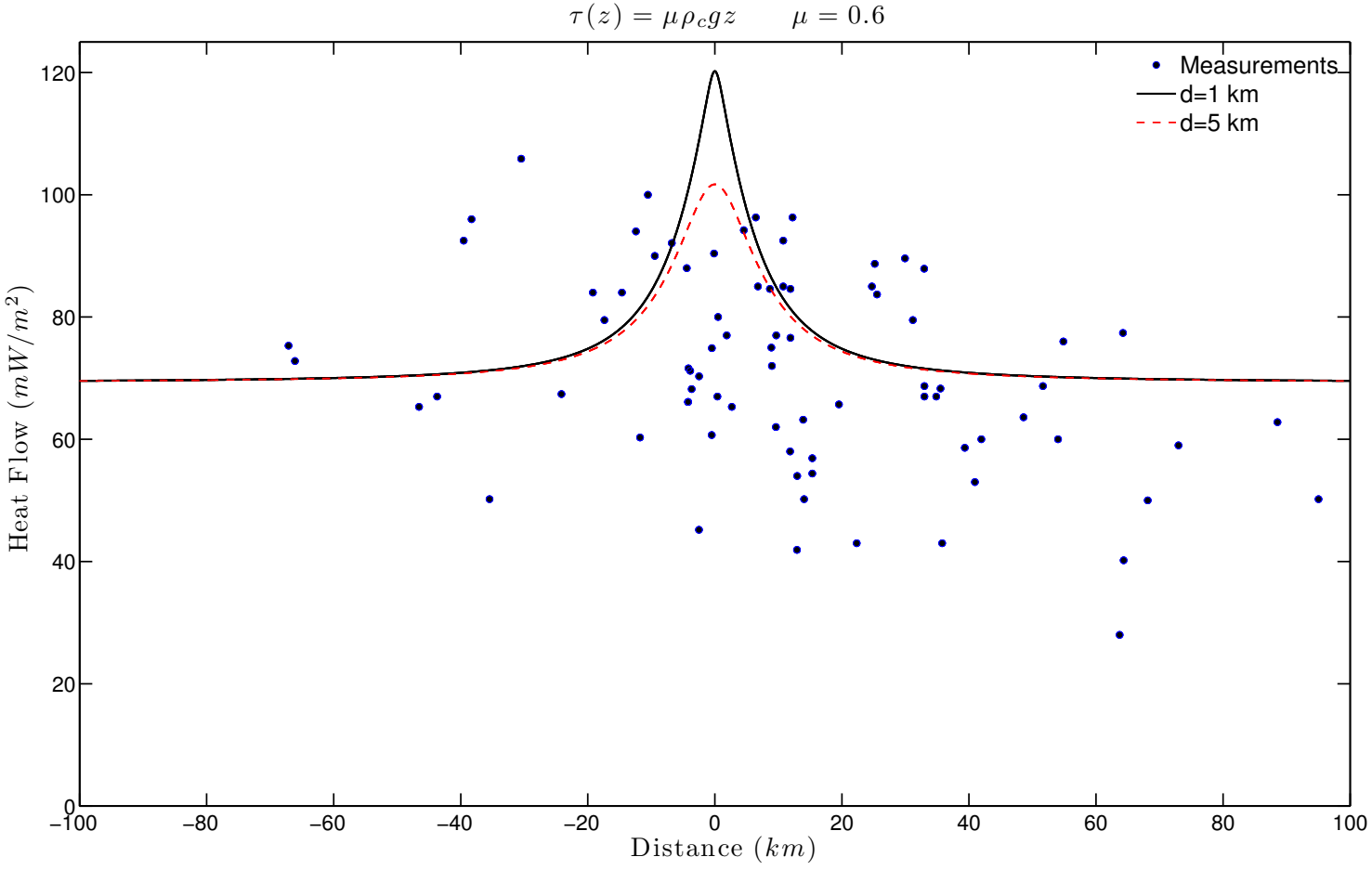

Comparison of model and measurements(cont.)

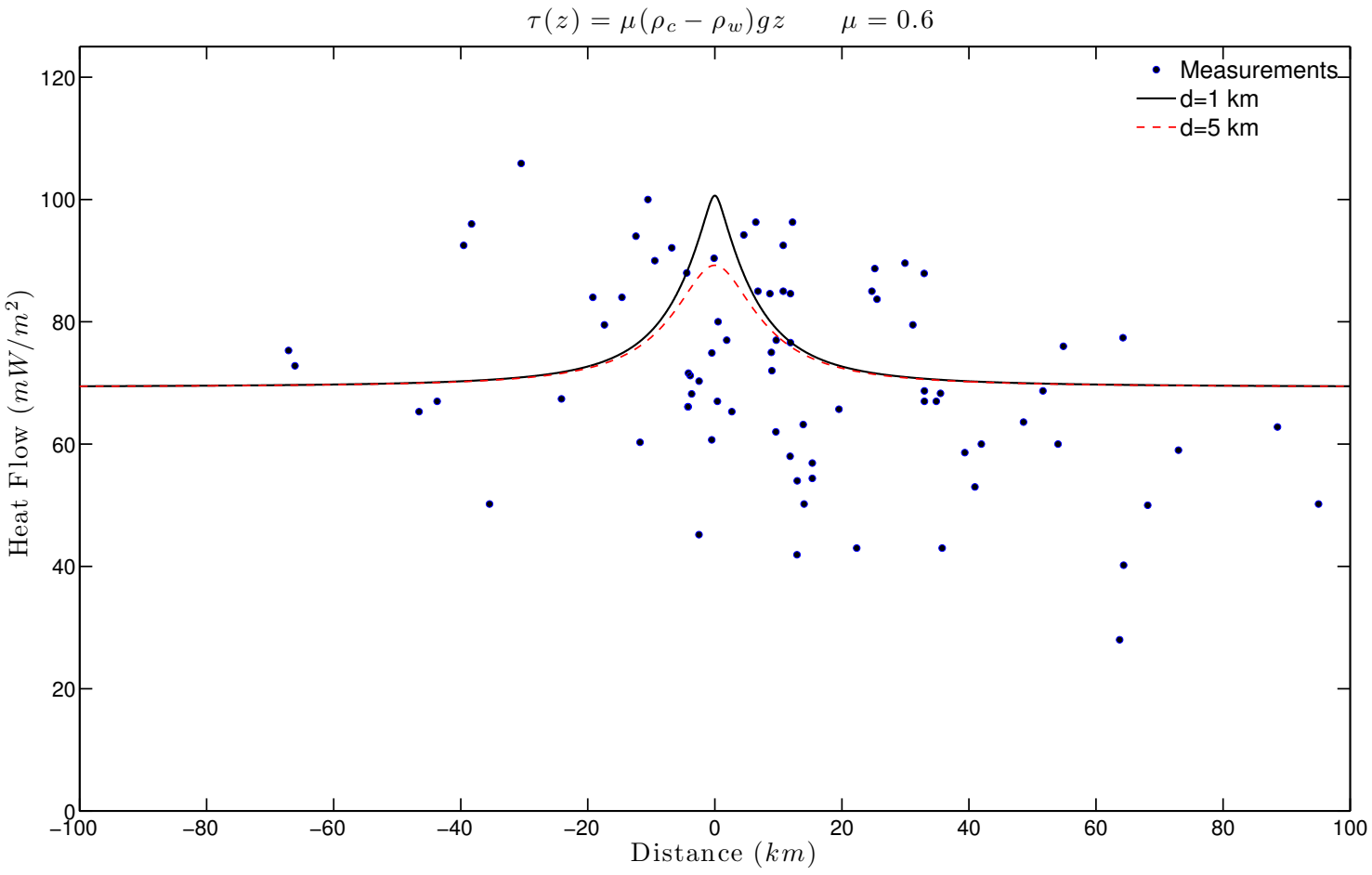

Comparison of model and measurements(cont.)

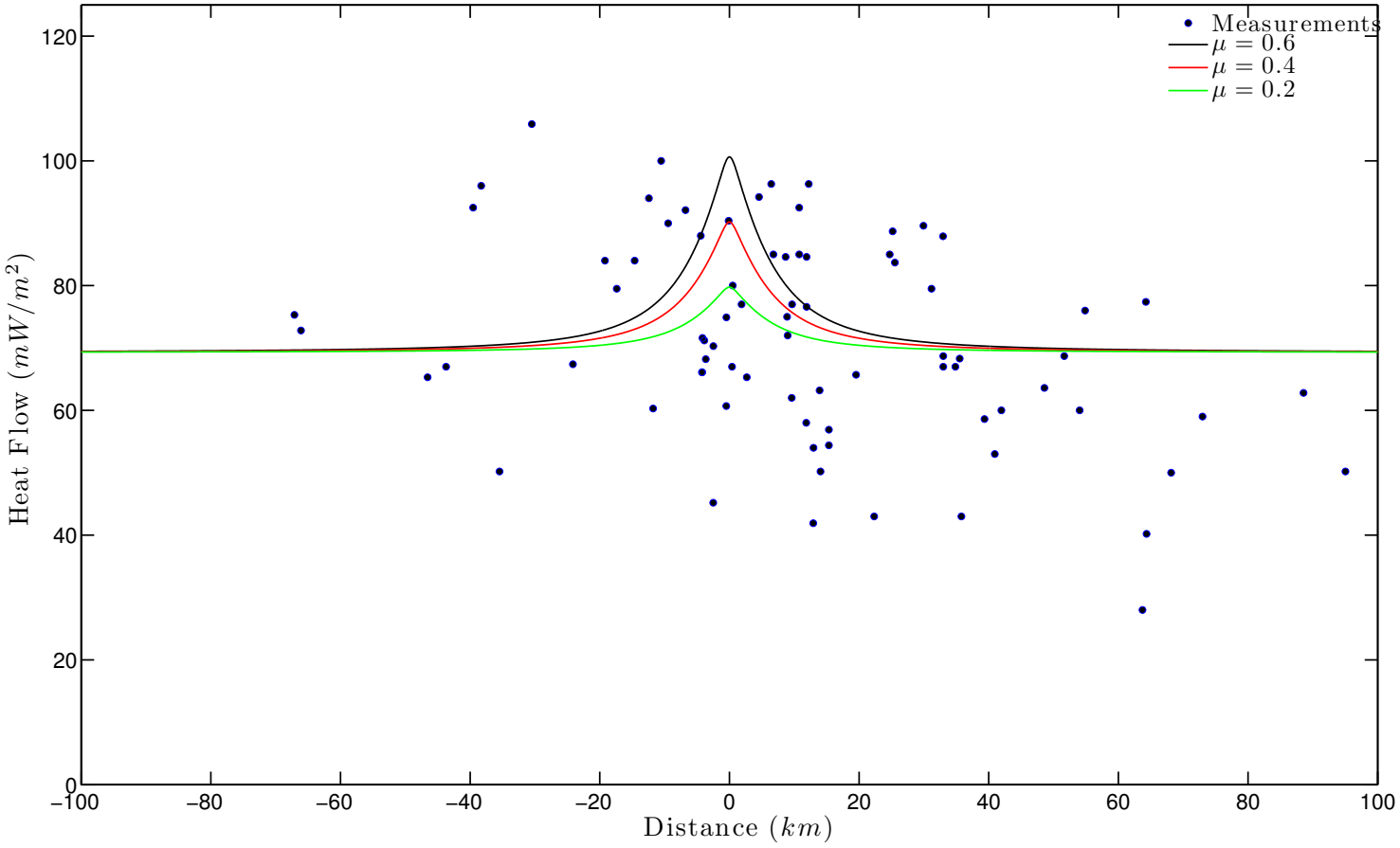

Conclusions

The comparison reveals an inconsistency between the modeled predictions and the measurements.

To make a model matching the data, we need

- a lower coefficient of friction; a friction coefficient of 0.6 is too high.
- to consider a hydrological system that can remove heat
- to change the model to include nonlinear terms

Thank you !